Marco Batyline Bar with Arm

Square Tubular Aluminum Powder Coated Frame • Batyline Seat and Back, Polywood Armrests • 325 lbs capacity

BUM
COMMERCIAL FURNITURE
OUTDOOR + INDOOR

Antracite / Batyline
516B-BT-GA
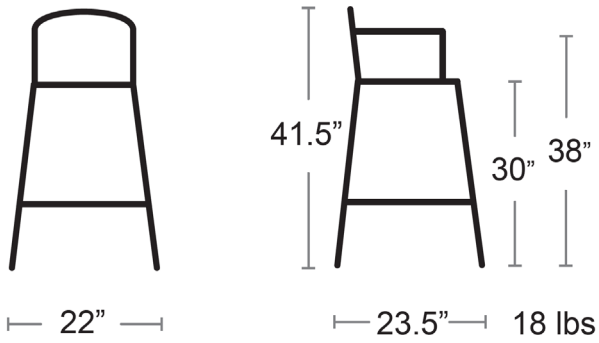
Silver / Batyline
516B-BT-GS